版次(Ed)	变更摘要(Change The Content)	日期(Date)
0	新产品发行(New Product Launch)	2017/09/06

序号 (NO.)	品名 (Name)	材质 (Material)
①	2.00 F型立式2代WTB胶芯 2.00 Pitch S/T Wire To Board Housing(H=8.3)	LCP UL94V-0 本色 Natural
②	2.00 F型卧式2代WTB端子 2.00 Pitch R/A Wire To Board Terminal(H=5.2)	铜合金/表面镀锡 Copper Alloy/ Tin Plating
③	2.00 F型立式2代WTB焊片 2.00 Pitch S/T Wire To Board Fitting Nail(H=8.3)	铜合金/表面镀锡 Copper Alloy/ Tin Plating
④	2.00 F型立式2代WTB吸盖 2.00 Pitch S/T Wire To Board Cover(H=8.3)	LCP UL94V-0 本色 Natural

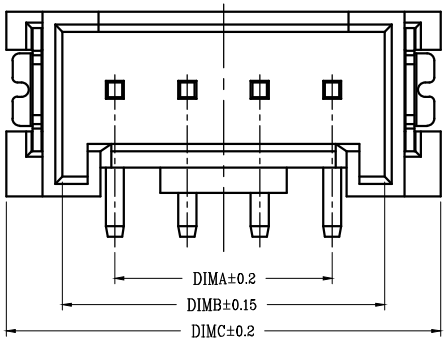

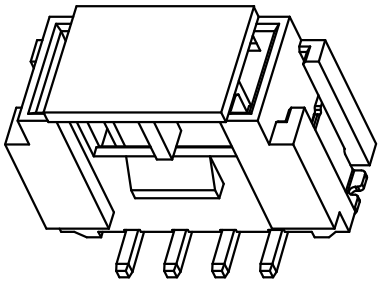

技术指标:

1. 工作温度: -25° C～85° C.
2. 额定电压: 200V DC/AC(rms).
3. 额定电流: 2.0A AC,DC.
4. 接触电阻: ≤20mΩ.
5. 耐压值: 500V AC/minute.
6. 绝缘电阻:≥1000MΩ.
7. 产品料号:

WT200FL—** * *—**

NO OF CKT(产品PIN数)

Plating(电镀方式)
1: 端子全金 (Terminal G/F OVER ALL)
4: 端子全亮锡 (Terminal all bright tin)

Packing(包装方式)
T: TUBE管装
R: TAPE & REEL卷装
C: TAPE & REEL WITH COVER加吸盖卷装

20	胶芯有LOGO:WD(Housing with LOGO:WD)
2W	胶芯无LOGO(Housing without LOGO)
H7	红色，胶芯无LOGO(Housing without LOGO)
H1	黑色，胶芯无LOGO(Housing without LOGO)

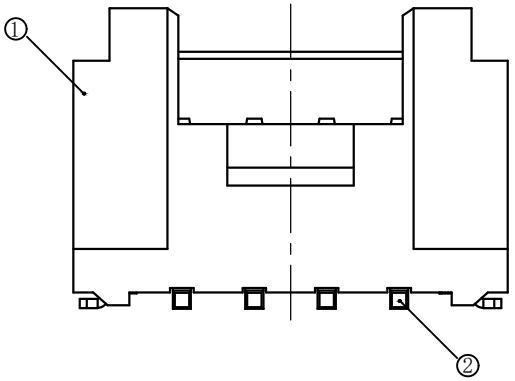

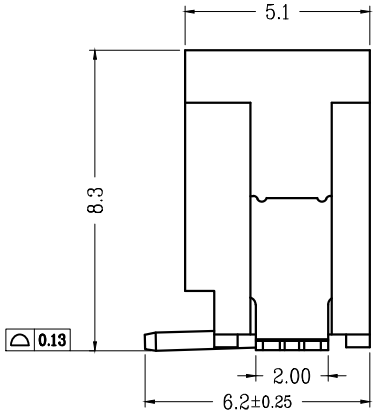

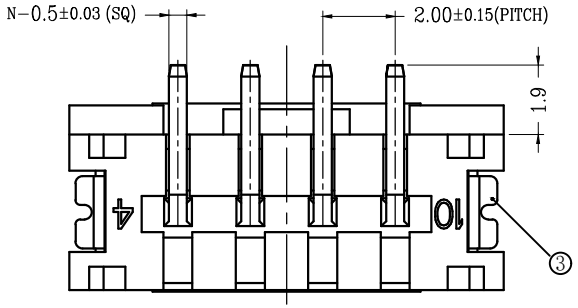

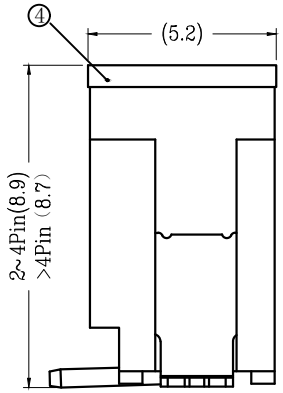

WITH COVER

CKT	DIM A	DIM B	DIM C	DIM D
2	2.00	4.90	8.00	2.50
3	4.00	6.90	10.00	2.50
4	6.00	8.90	12.00	3.50
5	8.00	10.90	14.00	5.50
6	10.00	12.90	16.00	7.50
7	12.00	14.90	18.00	9.50
8	14.00	16.90	20.00	11.50
9	16.00	18.90	22.00	13.50
10	18.00	20.90	24.00	15.50
11	20.00	22.90	26.00	17.50
12	22.00	24.90	28.00	19.50
13	24.00	26.90	30.00	21.50
14	26.00	28.90	32.00	23.50
15	28.00	30.90	34.00	25.50
16	30.00	32.90	36.00	27.50
17	32.00	34.90	38.00	29.50
18	34.00	36.90	40.00	31.50
19	36.00	38.90	42.00	33.50
20	38.00	40.90	44.00	35.50

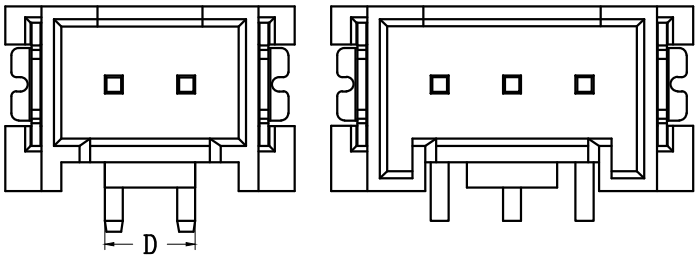

2 PIN 结构样式 (Structural style)

3 PIN 结构样式 (Structural style)

适用线路板(PCB LAYOUT)

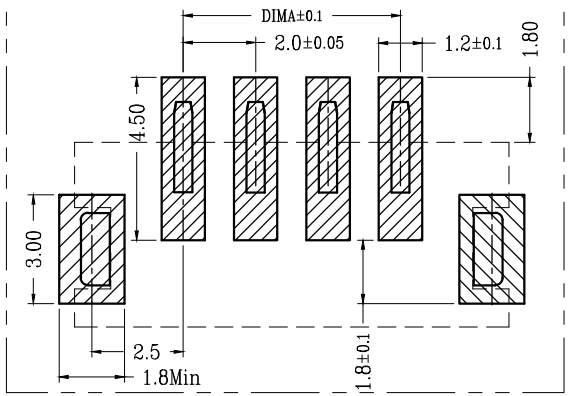

RoHS

一般公差(TOLERANCE)
X. ±.50 .XX ±.10
.X ±.20 .XXX ±.05
ANGLES ±1°

ZGWD 浙江温达电子有限公司 ZHEJIANG WENDA ELECTRONICS CO.,LTD

品名 (TITLE) 2.00 Pitch F型立式2代WTB 2.00 PITCH H8.3 S/T WIRE TO BOARD SMT CONN.

料号 (DWG.NO) WT200FL-****-**

制图 (DR) Anlan

校对 (CHKD) 王涛

审核 (APPD) 黄志明

比例 (SCALE) 1:1

单位 (UNITS) mm

张数 (SHEET) 1 OF 1

SIZE A4

REV A