Controlled by the Serial

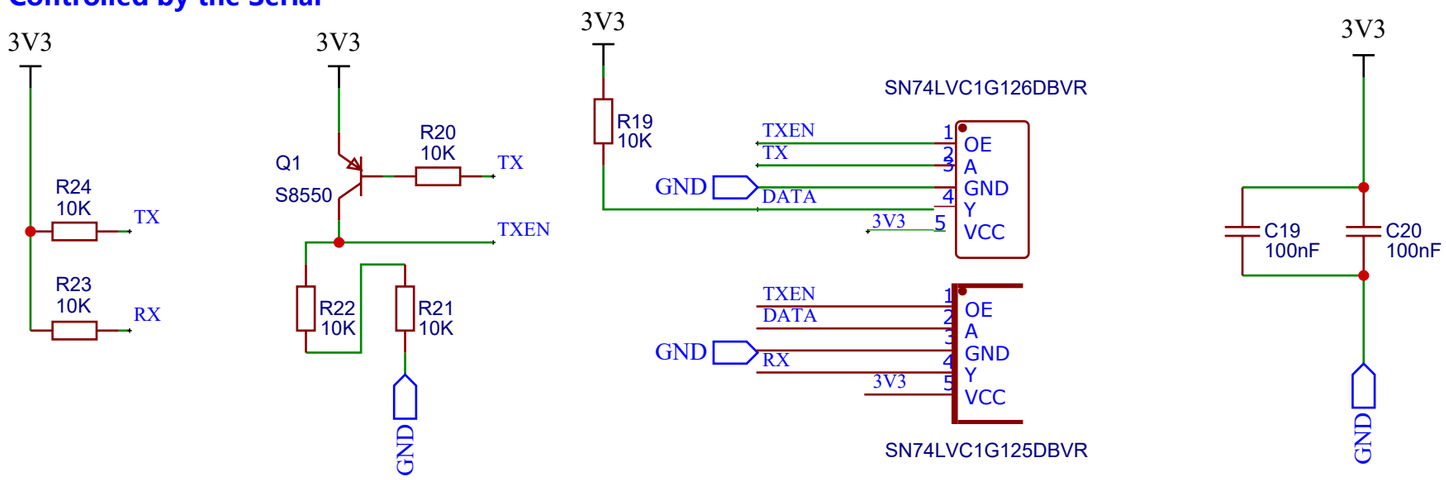

5264-3A (Bus servo control interface)

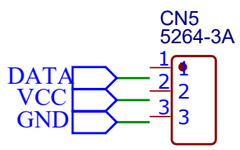

VCC is the positive power supply, which requires the high current.

TITLE: Bus servo control circuit	REV: 1.0
Company: WaveShare	Sheet: 1/1
Date: 2022-05-31 Drawn By: EffectsMachine	