凌科电气

产品规格书 SPECIFICATIONS

订购信息/产品编号 Ordering information/ Product numbers

YM-20 waterproof connectors 防水连接器

规格 Specifications

适用于电源
Our products is applicable to electric power source

连接方式: 1/4快速卡口连接	Connecting mode: 1/4 Mount connector
防护等级: IP65	Protection level: IP65
线材规格: 2.5mm²–4mm²	Wire gauge:14~12 AWG
额定电流A: 20A	Current rating: 20A
温升: 20A时温升在30℃以下， 25A时温升在40℃以下， 30A时温升在50℃以下	temperature rise：20A per contact at 30℃, 25A per contact at 40℃, 30A per contact at 50℃
接触件直径.数量: ϕ3.0X3	Contact diameter/Number of contact: ϕ3.0X3
工作电压（AC.V.rms): 500V	Operating voltage (AC.V.rms): 500V
耐压(AC.V)1min: 2500V	Withstand voltage (AC.V)1min: 2500V
接触电阻: <1mΩ	Contact resistance: <1mΩ
绝缘电阻: >500MΩ	Insulation resistance: >500MΩ
耐久次数: ≥500次	Durability: ≥500 mating/unmating cycle
工作温度: –40° ~80°	Temperature rating: –40° ~ 80°
接线方式: 焊接式	Assembly style: Solder
严禁带电拔插	prohibited to charged inserted

YM-20-J03SX-01-001
Female Socket
母座

YM-20-C03PE-01-001
Male Plug
公头

YM-20-C03SX-01-001
Male Socket
公座

YM-20-J03PE-01-001
Female Plug
母头

材料 Material

1. 外壳、绝缘部件: 高性能工程塑料	1. Shell&insulated parts: High performance engineer plastic
2. 铜针: 铜合金(镀金)	2. Contact: Copper alloy (gold–plated)
3. 防水圈: 硅胶	3. Sealing: Silica gel

Connection schemes

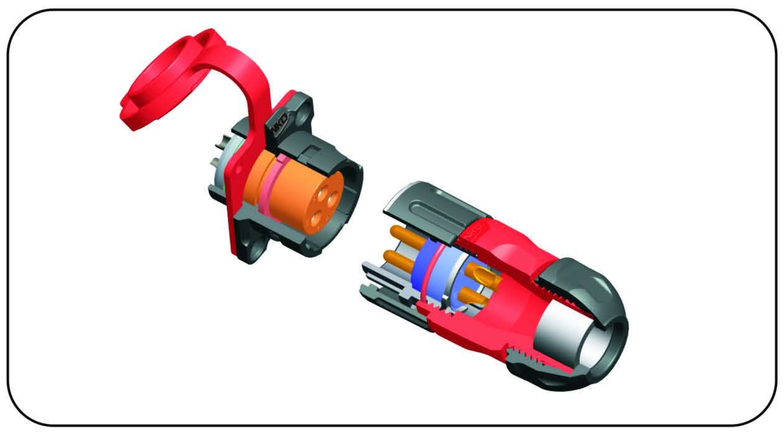

外型尺寸图 Dimensions figure

产品外型尺寸图
Dimensions figure

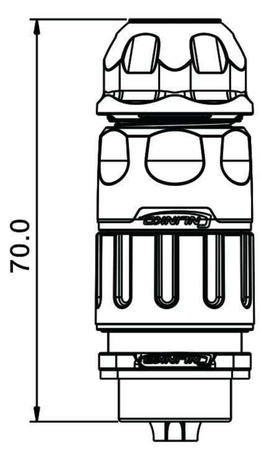

夹爪紧固式插头 PE(外型尺寸图)
PE clamping cable plug
(dimensions figure)

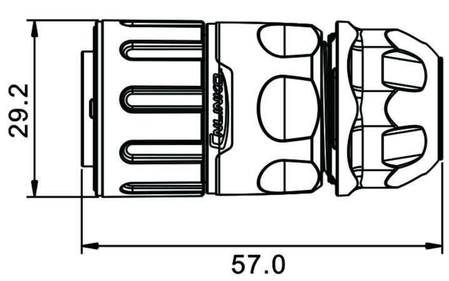

插座 S (外型尺寸图)
S socket (dimensions figure)

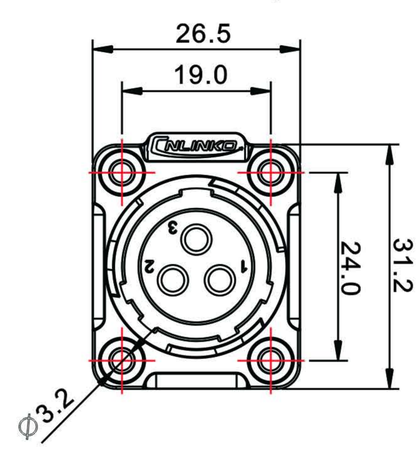

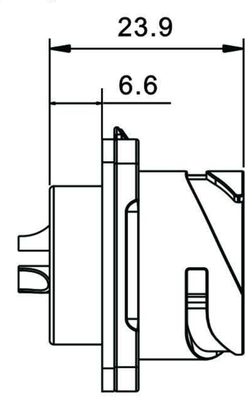

安装开孔图
Installation hole figure

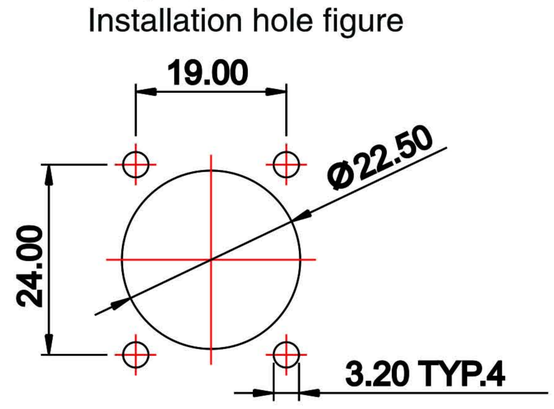

型号标志代号 Model code

YM-20-C03PE-01-001

- 产品型号:A~Z (AA~ZZ) / Product Type:A~Z (AA~ZZ)
- 插座与面板配合直径 / Diameter of Socket and cover board matched
- 接插件种类：单件 C= 插针 J= 插孔 / Contact Type: CJ= Male Plug to female socket
- 芯数：02~XX 不定上限 / Core quantity : 02~XX
- 商业代码 / Commercial Code
- 流水号 / Follow No.
- 外壳结构型式：G=带盖板 E=夹爪紧固式H=固定电缆式 R=其它 X=座子 不代表任何意义，补料号位数 / Shell struture form: G=with cover gasket E=clamping cable H=fixed cable R=others X=socket
- 连接器种类：P=插头 S=插座 / Connector part: P=plug S=socket